Model CB220

Parts View

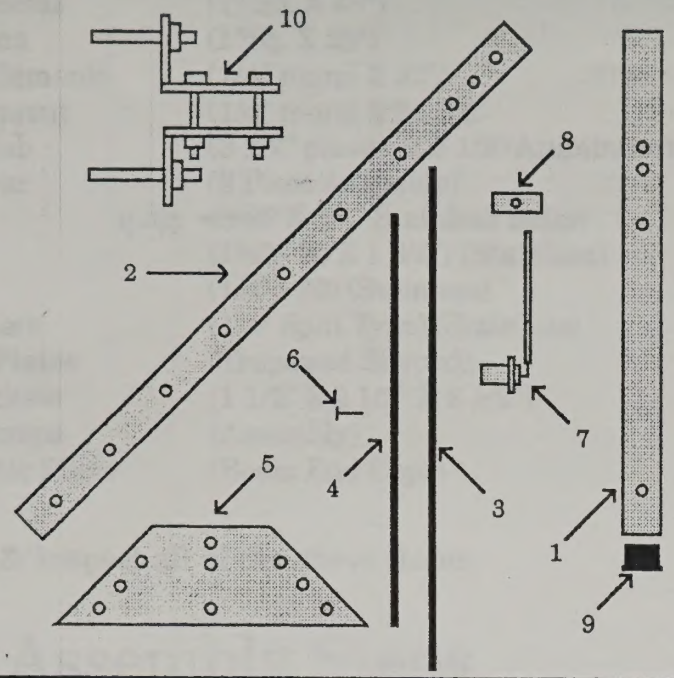

Fig. #	Part Number	Part Discription	Qty. Req.	Price Each
1	CB22001	Center Boom	1	$22.00
2	CB22002	Reflector Boom	2	$20.00
3	CB22003	Reflector Element	25	$3.25
4	CB22004	Driven Element	1	$3.00
5	CB45005	Assembly Plate	2	$6.00
6	146S06	6-32 X 3/4" Stainless Bolt	26	$.50
7	CB22007	Gamma Match Assembly	1	$12.00
8	146S08	Shorting Bar Assembly	1	$9.00
9	146S09	Plastic End Caps for Booms	6	$0.25
10	MB	Heavy Duty Mounting Bracket	1	$15.00

Please add $4.00 for Shipping and Handling per order.

Arrow Antenna
Parts Dept.
4340 Suncreek Dr.
Loveland, CO 80538

Arrow Antenna
4340 Suncreek Dr.
Loveland, CO 80538

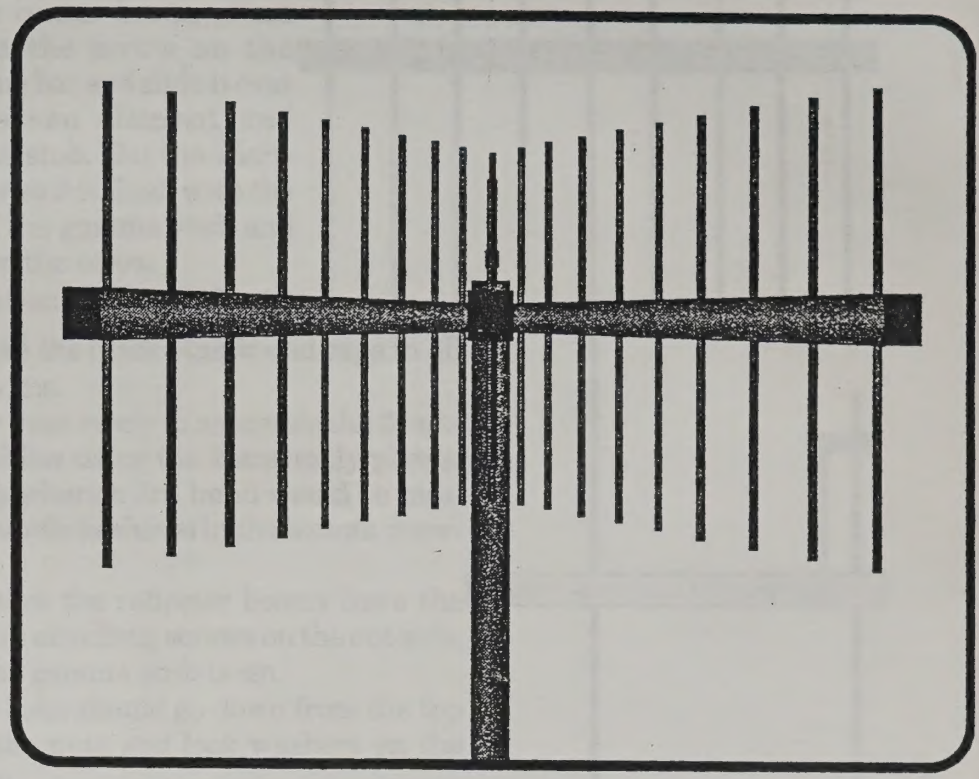

Guaranteed

No hassle refund Policy

If you are not completely satisfied with any ARROW ANTENNA it can be returned for a FULL refund less shipping and handling within 90 DAYS of purchase date.

SIMPLY THE BEST

Model CB 220

Packing List

2	Reflector booms	(1" Sq. X 48")
1	Center Boom	(1"Sq. X 25")
25	Reflector Elements	(1/4" round X 32")
1	Driven Element	(1/4" round X 24 1/2"
1	Gamma Stub	(3 1/2" plastic & 3 1/2" Aluminum)
1	Shorting Bar	(3 Piece Assembly)
26	Screws	4-40 ~~(6-32~~ X 3/4" Stainless Bolts)
10	Bolts	(1/4" - 20 X 1 3/4") (Stainless)
10	Nuts	(1/4" - 20) (Stainless)
10	Lock Washers	(1/4" Split Type) (Stainless)
2	Assembly Plates	(Trapezoid Shaped)
2	Angle Brackets	(1 1/2" X 2 1/2" X 2 1/2")
2	U-Bolt Clamps	(Assembly)
6	Black Plastic Plugs	(Boom End Caps)

•Locate & Inspect all of the above Items,

Assembly Steps

Take the 26 elements & install the 26 6-32 screws in the center of the element with your fingers. This is just to make sure all the elements are threaded properly and the screws start easy.

Insert the reflector elements into the 1/4" holes in the reflector booms. Fix the element in place by inserting the screw through the small hole in the side of the boom and screwing it into the element as shown. This may seem a little hard to start with, but you will get the hang of it.

Some times it is easier to use a small nail to align the element up with the hole in the boom.

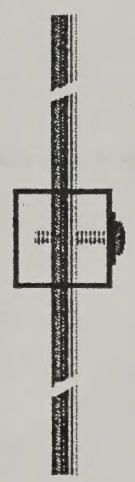

Caution : Do **NOT** over tighten the screw or it will bend the element. Turn the screw just till it is snug, then 1/4 turn more.

After you have installed 12 reflectors in each of the reflector booms, set them aside and assemble the main boom. First remove the 4 screws and remove the connector, turn it 90 degrees and reinstall with the copper wire sticking out the hole in the top of the boom.

Slide the gamma stub over the copper wire, about an 1/8" of the plastic should go through the 3/16" hole in the boom. Attach the driven element & the last reflector to the center boom. Next loosen the screw on the shorting bar and slide it over the driven element and gamma stub. Set the shorting bar so it is flush with the top of the gamma stub and tighten the screw.

(See Gamma Match Sheet)

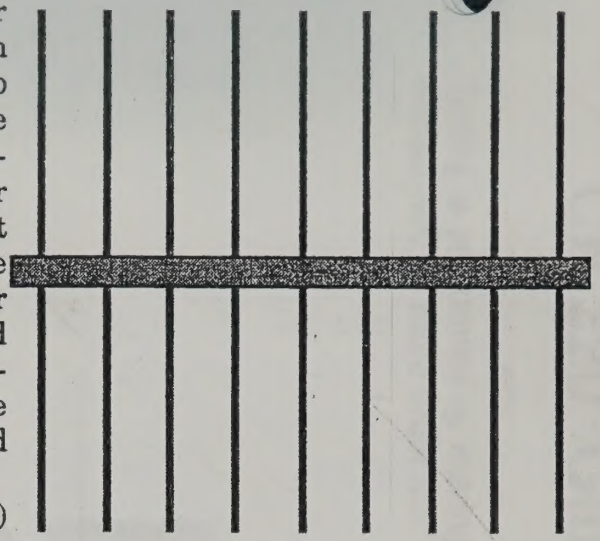

Install the black plastic end caps in all the booms.

Now your ready to assemble the 3 sub-assemblies using the 2 assembly plates. This is where a 3rd hand would be nice.

Assemble as shown in the bottom drawing.

Be sure the reflector booms have the element attaching screws on the out side, and the gamma stub is up.

The bolts should go down from the top with the nuts and lock washers on the bottom.

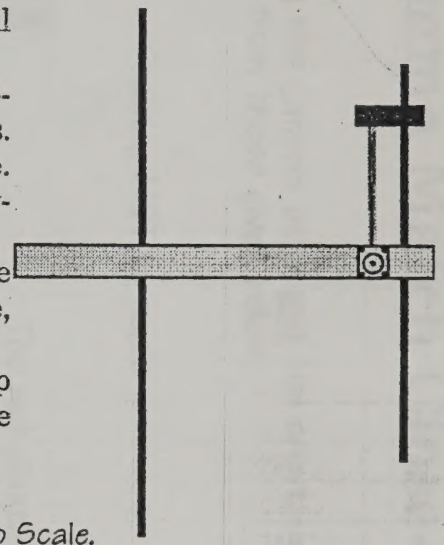

Drawings NOT to Scale.

Shorting Bar

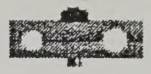

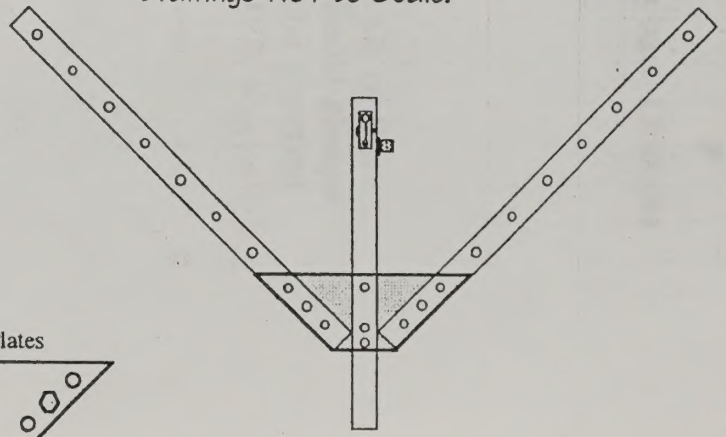

Assembly Plates

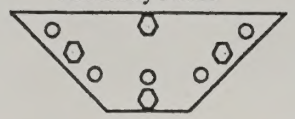

CB 220 Gamma Match Close-up

Tuning is preformed by moving the gamma stub <u>and</u> the shorting bar. Changes should not be more than 1/8" from those given below.

Drawing NOT to scale

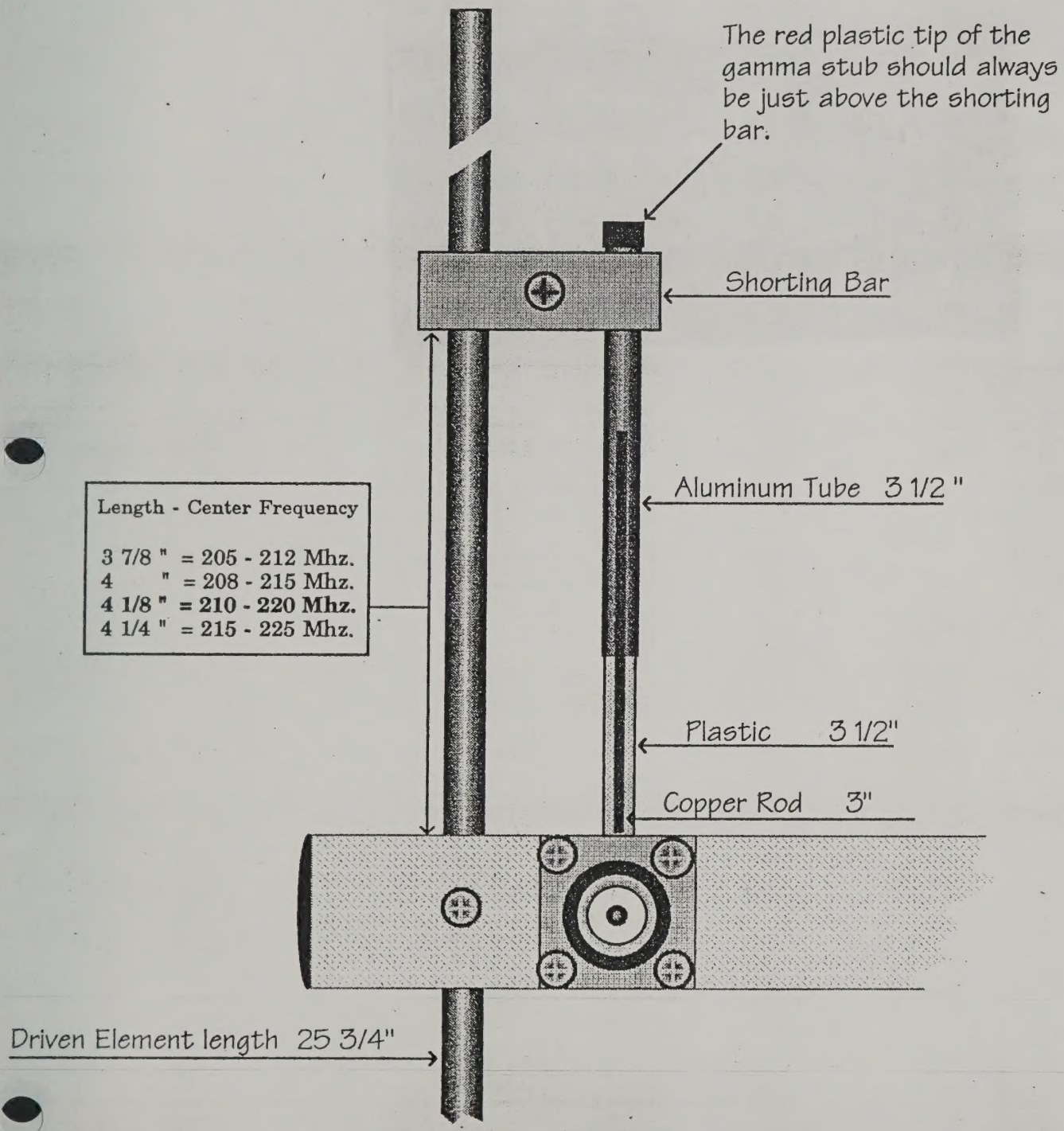

Length - Center Frequency	
3 7/8 "	= 205 - 212 Mhz.
4 "	= 208 - 215 Mhz.
4 1/8 "	**= 210 - 220 Mhz.**
4 1/4 "	= 215 - 225 Mhz.

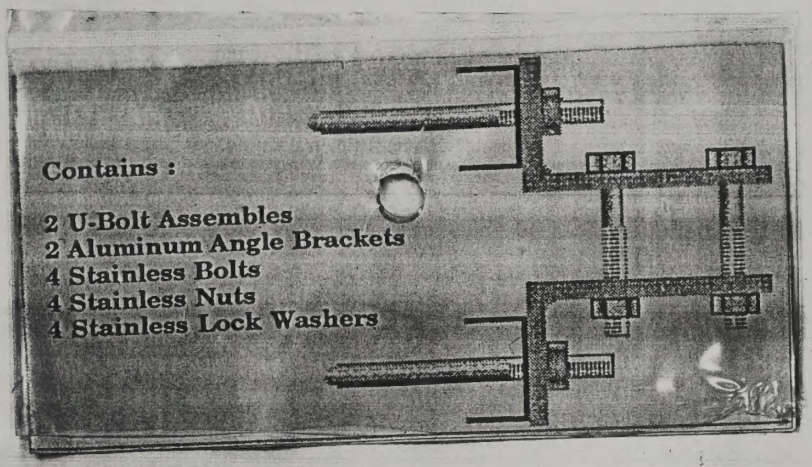
Contains :
2 U-Bolt Assembles
2 Aluminum Angle Brackets
4 Stainless Bolts
4 Stainless Nuts
4 Stainless Lock Washers